SERVICE PARTS LIST

BULLETIN NO.
54-05-0090

SPECIFY CATALOG NO. AND SERIAL NO. WHEN ORDERING PARTS				REVISED BULLETIN	DATE Nov. 2008
CORDLESS 18 VOLT VACUUM CLEANER					
CATALOG NO.	**0880-20**	STARTING SERIAL NO.	**B34A**	WIRING INSTRUCTION **58-01-1195**	

00 | 0 **EXAMPLE:** Component Parts (Small #) Are Included When Ordering The Assembly (Large #).

FIG.	PART NO.	DESCRIPTION OF PART	NO. REQ.
1	14-34-0020	Handle Set	(1)
2	06-65-1260	Handle Pin	(2)
3	31-15-0670	Top Cover	(1)
4	31-01-2100	Straight Nozzle	(1)
5	31-01-2110	Wide Nozzle	(1)
6	42-36-2180	Latch Bracket	(2)
8	43-44-1275	Handle Cover Gasket	(1)
9	42-92-1545	Handle Cover	(1)
10	42-70-0170	Nozzle Clip	(2)
11	31-01-2115	Vacuum Top Housing	(1)
12	44-50-0210	Hinge Pin	(2)
13	14-46-0010	Top Latch Kit	(2)
13-1	----------	M3 Nut	(4)
13-2	----------	Latch Bracket	(2)
14	10-15-1605	Warning Label	(1)
15	12-20-2000	Service Nameplate	(1)
17	43-44-1280	Switch Gasket	(1)
19	44-86-0385	Switch Retainer	(1)
20	44-86-0390	Switch Retainer	(1)
21	44-52-0875	Switch Pad	(1)
22	23-66-2790	Switch	(1)
25	42-90-0375	Crooked Pipe	(1)
27	14-37-0160	Hose Assembly	(1)
28	42-92-1540	Hose Wrap Cover	(1)
29	43-72-0630	Hose Wrap	(1)
30	31-10-0160	Mounting Bracket	(2)
38	31-53-0250	Plug	(8)
39	31-01-2125	Filter Seesaw	(1)
40	45-06-0860	Filter Seal	(1)
41	42-46-0260	Filter Core	(1)
42	42-46-0265	Filter Ball	(1)
43	43-44-1295	Filter Gasket	(1)
44	49-90-1900	Filter Assembly	(1)
45	43-44-1270	Bottom Gasket	(2)
46	31-01-2130	Vacuum Bottom	(1)
47	14-46-0013	Bottom Latch Kit	(2)
47-1	----------	M3 Nut	(4)
47-2	----------	Latch Bracket	(2)
49	06-97-0455	Sealing Washer	(4)
50	05-78-0820	2.6 x 8 Screw	(9)
51	05-81-0555	3 x 10 Screw	(6)
53	05-78-0830	2.6 x 10 Screw	(5)
54	----------	2.6 x 8 Washer Head Screw	(3)
55	10-15-1616	Battery Label	(1)
56	05-78-0835	3.5 x 10 Screw	(4)
57	43-44-1271	Gasket	(2)
58	31-53-0255	Plug A	(2)
59	10-15-1618	Logo Label	(1)

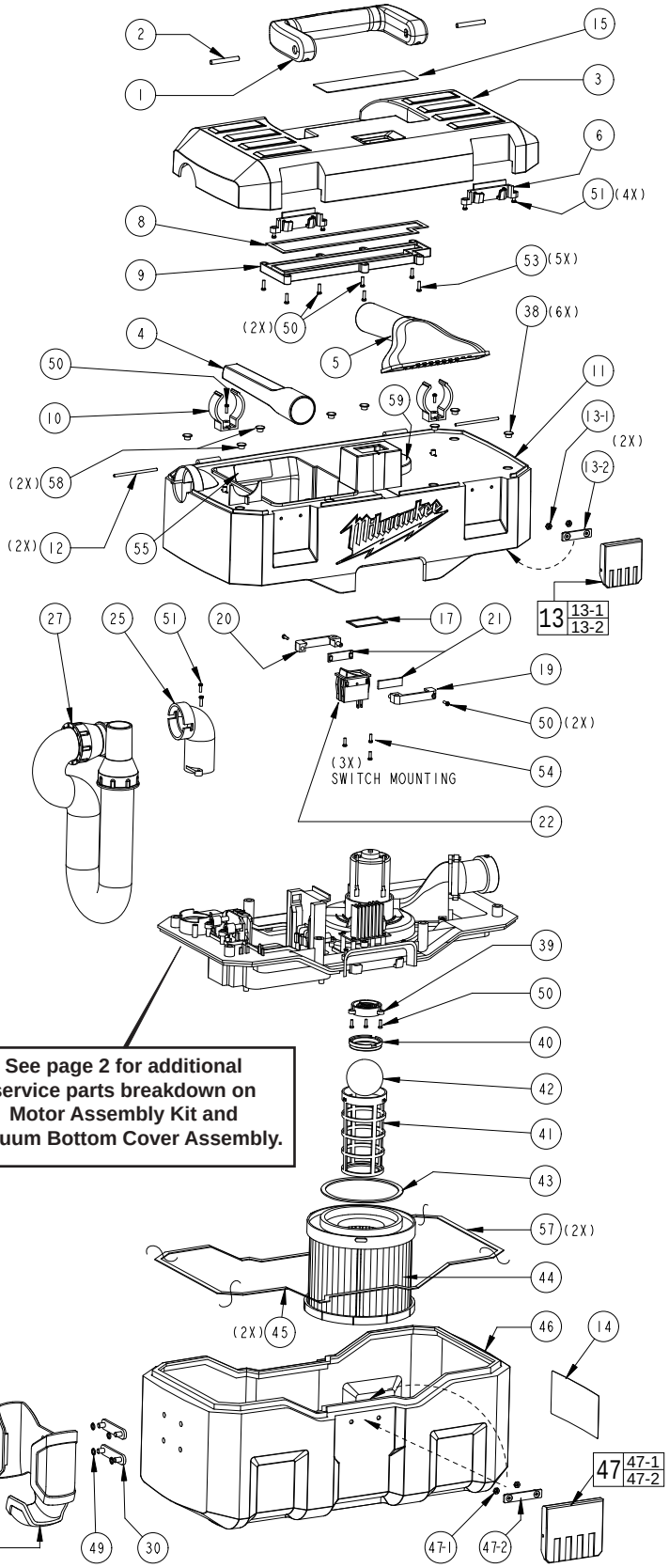

See page 2 for additional service parts breakdown on Motor Assembly Kit and Vacuum Bottom Cover Assembly.

MILWAUKEE ELECTRIC TOOL CORPORATION
13135 W. LISBON RD., BROOKFIELD, WI 53005
Drwg. 3

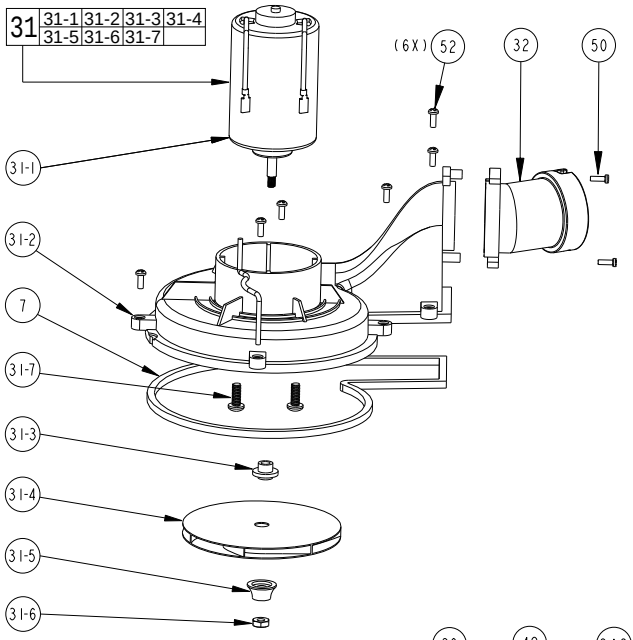

FIG.	PART NO.	DESCRIPTION OF PART	NO. REQ.
7	43-44-1300	Fan Gasket	(1)
31	23-30-0545	Motor Assembly Kit	(1)
31-1	----------	18 V Motor	(1)
31-2	----------	Motor Housing	(1)
31-3	----------	Motor Hub Top	(1)
31-4	----------	Fan Wheel	(1)
31-5	----------	Motor Bottom Mat	(1)
31-6	----------	Motor Nut	(1)
31-7	----------	M5 x 12 Screw	(2)
32	45-76-0620	Connector Pipe Tube	(1)
50	05-78-0820	2.6 x 8 Screw	(2)
52	05-78-0825	3 x 8 Screw	(6)

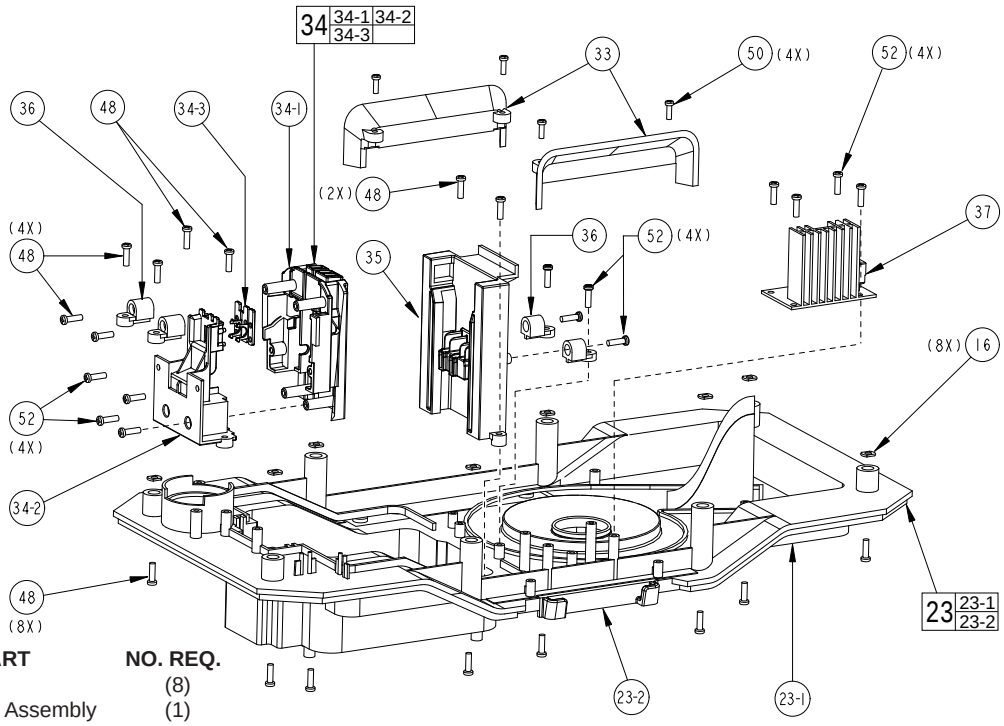

FIG.	PART NO.	DESCRIPTION OF PART	NO. REQ.
16	34-40-0080	O-Ring	(8)
23	31-01-2120	Vacuum Bottom Cover Assembly	(1)
23-1	----------	Vacuum Bottom Cover	(1)
23-2	----------	Hook Latch	(2)
33	31-76-0050	Latch Shroud	(2)
34	14-20-3185	Terminal Block Assembly w/o wires	(1)
34-1	----------	V18 Connector Block	(1)
34-2	----------	V18 Support Terminal	(1)
34-3	----------	Terminal Clip	(1)
35	14-20-3190	Terminal Block Assembly w/o wires	(1)
36	42-36-2185	Mounting Bracket	(4)
37	22-09-1710	PCB Board Assembly	(1)
48	05-81-0560	3 x 12 Screw	(16)
50	05-78-0820	2.6 x 8 Screw	(4)
52	05-78-0825	3 x 8 Screw	(12)