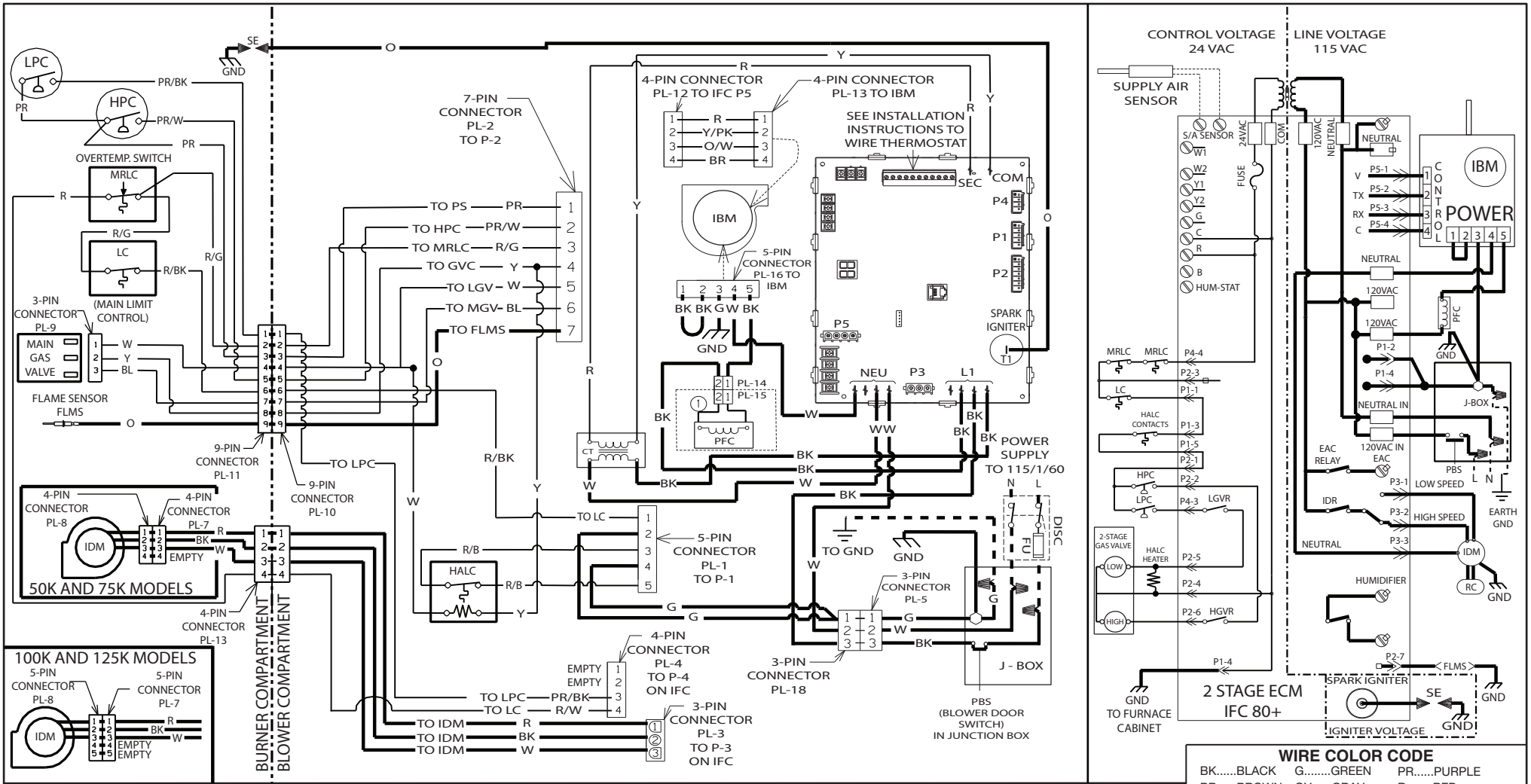

WIRING INFORMATION

LINE VOLTAGE
- -FACTORY STANDARD
- -FACTORY OPTION
- -FIELD INSTALLED

LOW VOLTAGE
- -FACTORY STANDARD
- -FACTORY OPTION
- -FIELD INSTALLED

REPLACEMENT WIRE
-MUST BE THE SAME SIZE AND TYPE OF INSULATION AS ORIGINAL (105C. MIN.)

WARNING
-CABINET MUST BE PERMANENTLY GROUNDED AND CONFORM TO I.E.C., N.E.C., C.E.C., NATIONAL WIRING REGULATIONS, AND LOCAL CODES AS APPLICABLE.

NOTES

(1) JUMPER USED IN PLACE OF PFC ON 1/2 HP MOTOR MODELS

COMPONENT CODES

BLWR	BLOWER RELAY	HUM	HUMIDIFIER OUTPUT	PL	PLUG
C	COMMON	IBM	INDUCED BLOWER MOTOR	PS	PRESSURE SWITCH
CC	COOLING CONTACTOR	IDM	INDUCED DRAFT MOTOR	RC	RUN CAPACITOR
CT	CONTROL TRANSFORMER	IDR	INDUCED DRAFT RELAY	SE	SPARK ELECTRODE
DISC	DISCONNECT SWITCH	IFC	INTEGRATED FURNACE CONT	TM	THERMISTOR
EAC	ELECT. AIR CLEANER OUTPUT	LC	LIMIT CONTROL	WS	WATER SENSOR
FLMS	FLAME SENSOR	LGV	LOW GAS VALVE		WIRE NUT
FR	FAN RELAY	LPC	LOW PRESSURE CONTROL		
FU	FUSE	M	MAIN		
GND	GROUND	MC	MEMORY CARD		
GVC	GAS VALVE COMMON	MGV	MAIN GAS VALVE		
GVR	GAS VALVE RELAY	MRLC	MAN. RESET LIMIT CONTROL		= CHASSIS GROUND
HALC	HEAT ASSISTED LIMIT CONTROL	NEU	NEUTRAL		
ACR	HEAT/COOL RELAY	NPC	NEGATIVE PRESSURE CONT.		= EARTH GROUND
HGV	HIGH GAS VALVE	PBS	PUSH BUTTON SWITCH		
HPC	HIGH PRESSURE CONTROL	PFC	POWER FACTOR CHOKE		

WIRE COLOR CODE

BK.....BLACK	G.....GREEN	PR.....PURPLE
BR.....BROWN	GY.....GRAY	R.....RED
BL.....BLUE	O.....ORANGE	W.....WHITE
		Y.....YELLOW

ELECTRICAL WIRING DIAGRAM

DOWNFLOW
BLOWER INDUCED DRAFT
TWO STAGE 80 PLUS ECM
GAS FIRED, FORCED AIR FURNACE
W/ ECM MOTOR & ECO NET

APPROVED:	CHECKED:	ORIGINAL RELEASE NO.:
MODELED BY: JHB	DATE: 8-5-14	G-1021S044
PART NO.: 90-104961-08		REV: 03